Flying Cloud - MIzzen Mast Furniture

Dimensions from McLean launching article, details from Murphy, Crothers & Underhill Masting books and Lankford Flying Fish plans

E = eye
U = eye under

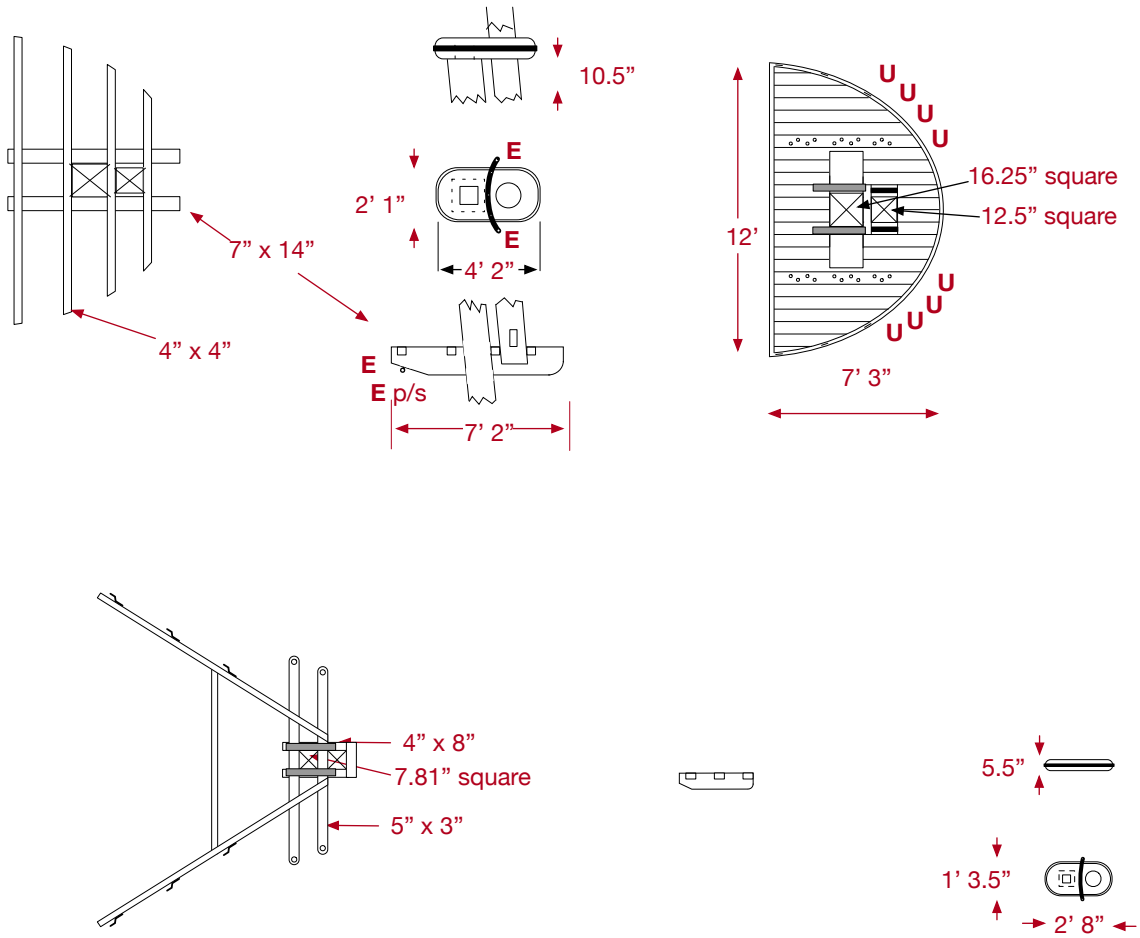

scale 1:96

scale 1:96

10” at 1:96

2018-07-09

© Scott Bradner - 2018